# JeeNode V5

*A small *duino-ish MPU board with a wireless RF module*

Jean-Claude Wippler
jeelabs.org
September 2010

## Overview

The "JeeNode" is a small micro-controller board which can be used for a variety of Physical Computing[1] tasks. From measuring things like temperature and other environmental data to tracking / controlling energy consumption around the house. It was inspired by the fascinating Arduino[2] board and its IDE, which open up a whole new world of C/C++ computing on tiny devices.

## What's on the board

From left to right:

- a 6-pin FTDI-compatible serial I/O port
- a 3.3V power regulator which accepts 3.5 ... 13V as external power source
- an 8-pin combined Power/Serial/I²C/Extended (PSIX) connector
- an ATmega328 MPU by Atmel, with 16 MHz ceramic resonator
- a 2x4-pin combined SPI/ISP connector, with 2 select lines
- a RFM12B wireless RF module for the 433, 868, or 915 MHz ISM band, by Hope RF

Plus on both long sides of the board: two I/O "ports" each, with 1 analog/digital I/O, 1 digital I/O, +3.3V, ground, PWR, and interrupt (IRQ) line. All four ports have an identical pinout.

[1] http://en.wikipedia.org/wiki/Physical_computing
[2] http://arduino.cc/

## Similarities with Arduino boards

- they run the same bootstrap code, and can therefore run Arduino IDE “sketches”
- same micro-controller as the current range of Arduino / Freeduino / and other *duinos

## Differences with Arduino boards

- there’s a wireless RF module on board, whee!
- completely different physical layout, incompatible with Arduino “shields”
- a JeeNode runs internally at 3.3V, not 5V - this also affects all I/O ports & pins
- not all the Arduino pins are brought out on connectors, pins are assigned fixed roles
- the ISP connector has an extra 2 pins, to allow re-using it as SPI bus for 1 or 2 devices
- the TWI bus has been permanently assigned to its own connector
- runs at 16 MHz[3] - but with a slightly less accurate ceramic resonator i.s.o. a crystal
- there are no LEDs, to reduce power consumption when running off batteries

## Rationale

The main reason for creating the JeeNode was that Arduinos are not yet very convenient for 3.3V devices such as the RFM12B module. By including a 3.3V regulator, the JeeNode can be powered from USB with an FTDI cable/board, a DC power adapter, or various types of 3.6 ... 4.5V batteries.

The second reason was to have a configuration which includes wireless connectivity by default. The RFM12B module is a low cost option with sufficient power and range to provide reliable communication around the house - a basic packet protocol can be implemented in just 2..3 Kb of C code.

The third reason is that I constantly ran out of power and ground connectors when hooking up a few sensors to an Arduino. While there are nice “proto shields” to overcome this, it seemed logical to try and come up with a different connector scheme for the common case of just a few sensors / actuators. Furthermore, being identical, all four JeeNode ports have the same features and connections, allowing sensors to be re-used and re-combined later on.

Lastly, the JeeNode is designed from the ground up to support very low-power use with batteries.

[3] Using an ATmega168/328 at 16 MHz with 3.3V exceeds the specs by some 2.7 MHz - *but it works just fine.*

# Supporting software

JeeNodes are so similar to Arduinos that they can be used with the same IDE as Arduinos. This was a major design choice. Not only is the Arduino IDE very convenient with so many libraries written for it, it also happens to run equally well on Windows, Macintosh, and Linux.

The following libraries have been added to better support JeeNodes:

- The "Ports" library makes it easy to connect sensors to a port, and to re-use the same code when re-connecting those sensors to a different port later on. It contains a few extras over what the standard Arduino / Wiring code offers: a bit-banging TWI driver which can run on any port (even on all of them in parallel) and simple shift functions to drive SPI-like devices.
- The "RF12" library contains a driver for the RFM12B module. It makes it easy to send packets of up to 66 bytes of data around, either as broadcasts or in point-to-point mode. There is some logic to support sending acknowledgements, as starting point for building more reliable communication on - with retransmits and timeouts to deal with packet errors and loss.

These libraries, and all other code related to the Jee projects can be found on the Jee Labs site[4].

# Board layout

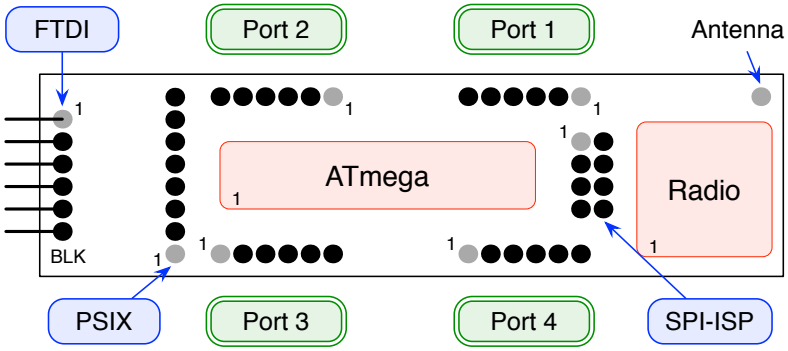


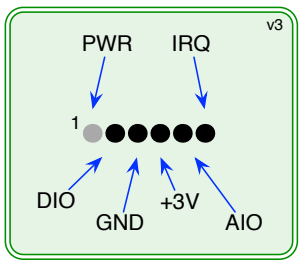


# Port / pin mapping

| Port | Type | Extras | Arduino | Signal | Chip |
|---|---|---|---|---|---|
| Port 1 | DIO | - | Digital 4 | PD4 | pin 6 |
| | AIO | Analog-in | Digital 14 / Analog 0 | PC0 | pin 23 |
| Port 2 | DIO | PWM (timer 0) | Digital 5 | PD5 | pin 11 |
| | AIO | Analog-in | Digital 15 / Analog 1 | PC1 | pin 24 |
| Port 3 | DIO | PWM (timer 0) | Digital 6 | PD6 | pin 12 |
| | AIO | Analog-in | Digital 16 / Analog 2 | PC2 | pin 25 |
| Port 4 | DIO | - | Digital 7 | PD7 | pin 13 |
| | AIO | Analog-in | Digital 17 / Analog 3 | PC3 | pin 26 |

[4] http://cafe.jeelabs.net/software/

# Pinout - JeeNode V5

*(pins are numbered 1...up from left to right when looking towards the upper side of the board)*

## Ports 1 ... 4

| Pin | Name | Description |
|---|---|---|
| 1 | PWX | external power |
| 2 | DIO | digital I/O line |
| 3 | GND | ground |
| 4 | +3V | regulated +3.3V |
| 5 | AIO | analog I/O line |
| 6 | IRQ | interrupt (tied to INT1) |

## FTDI connector

| Pin | Name | Description |
|---|---|---|
| 1 | GND | ground |
| 2 | N.C. | not connected |
| 3 | PWR | external power |
| 4 | RX | serial receive |
| 5 | TX | serial transmit |
| 6 | RTS | for bootstrap / reset |

## SPI/ISP connector

| Pin | Name | Description |
|---|---|---|
| 1 | MISO | master in / slave out |
| 2 | +3V | regulated +3.3V |
| 3 | SCK | SPI clock |
| 4 | MOSI | master out / slave in |
| 5 | RST | reset |
| 6 | GND | ground |
| 7 | SEL0 | tied to PB0 (A. pin 8) |
| 8 | SEL1 | tied to PB1 (A. pin 9) |

## PSIX connector

| Pin | Name | Description |
|---|---|---|
| 1 | +3V | regulated +3.3V |
| 2 | RXD | serial receive |
| 3 | GND | ground |
| 4 | PWR | external power |
| 5 | SDA | TWI/I²C data |
| 6 | SCL | TWI/I²C clock |
| 7 | TXD | serial transmit |
| 8 | RST | reset |

# Parts list - JeeNode V5

| Part | Value | Details | Digi-Key# |
|---|---|---|---|
| R1 | 10 kΩ | reset pull-up | |
| C1, C2, C3, C4 | 0.1 µF | decoupling | |
| C5 | 10 µF | electrolytic, polarity matters! | |
| IC1 | ATmega328-20 | can also use older ATmega168 | ATMEGA328P-PU |
| IC2 | MCP1702-33 | 3.3V LDO (alt: LP2950-3.3) | MCP1702-3302E/TO |
| D1 | 1N4004 | rectifier diode | 1N4004DICT-ND |
| X1 | 16 MHz resonator | 3-pin, built-in capacitors | X908-ND |

# jlpcb-105.sch

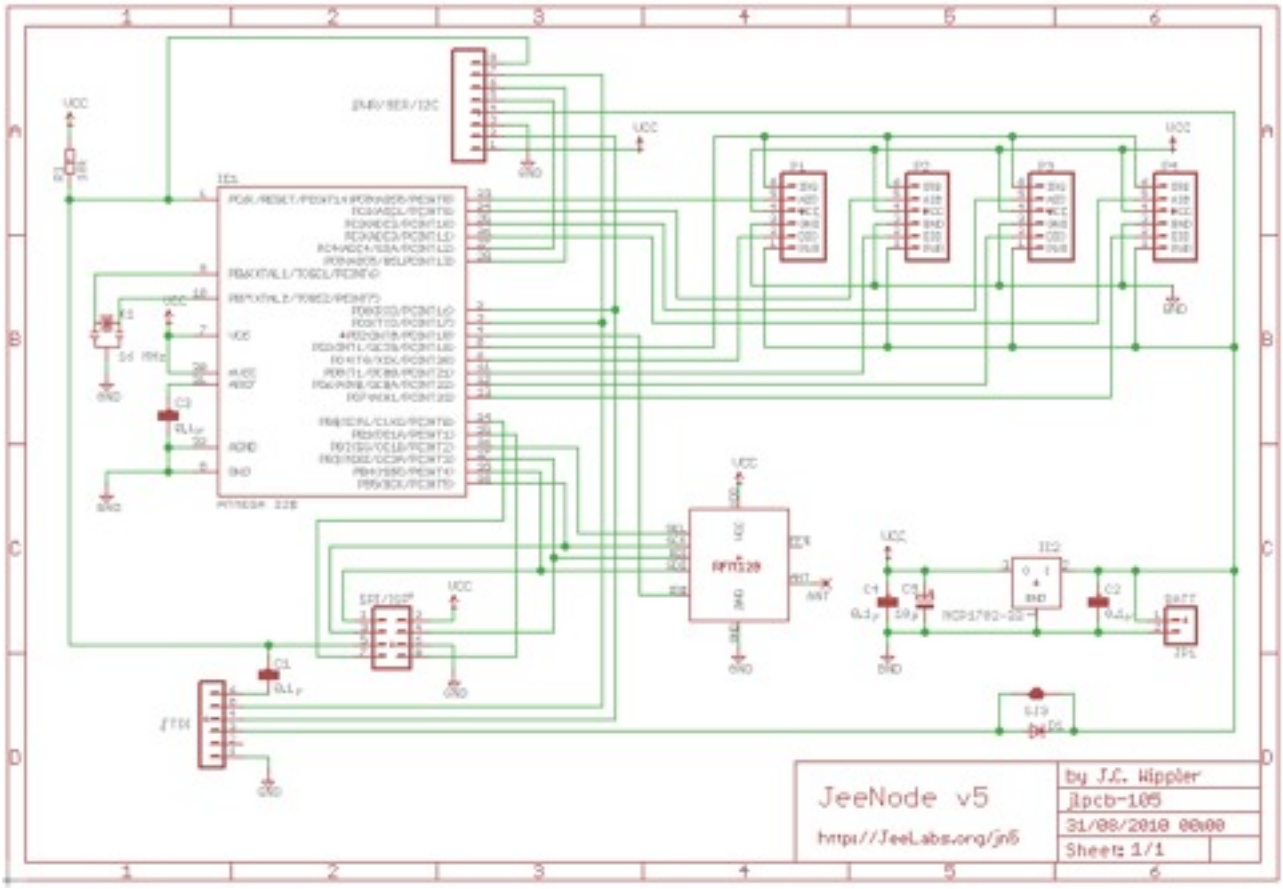


# jlpcb-105.brd

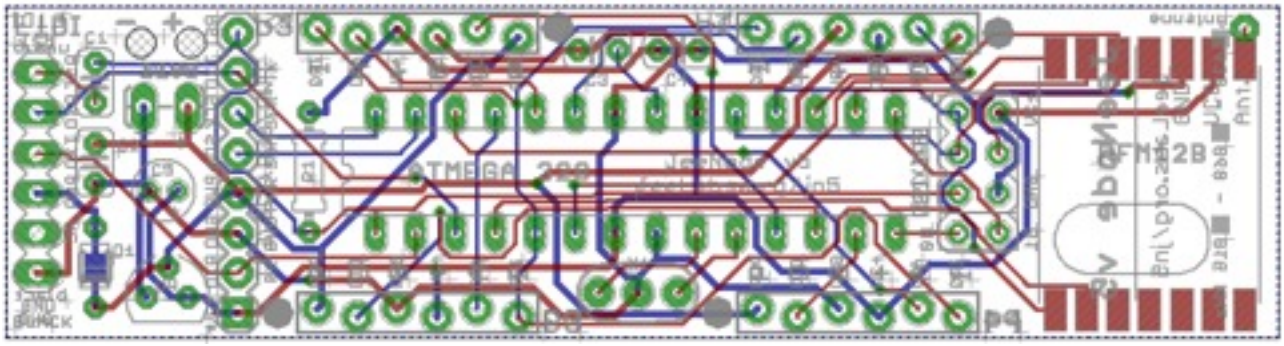

*(files created with EAGLE[5])*

[5] http://www.cadsoft.de/info.htm

# Differences between JeeNode v4 and v5

The “JeeNode v5” board has some small incremental improvements over the v4:

- On the left, there is now a diode between the FTDI power input and the rest of the PWR lines.
- **"PWR" will be about 0.7V lower on the PWR pins** in several places across the board, than on the power supplied to the FTDI power pin (i.e. 4.3V when fed from a USB-BUB).
- For 100% compatibility with the v4, the diode can be disabled with a solder jumper on the back.
- Two extra header pins have been added (+3V and RST), on either side of what was the "PWR/SER/I2C" header on the JeeNode v4 - it is now called the "PSIX" header (X = eXtended).
- The RFM12B module was moved a bit to make room for a hole for the antenna wire. Also a slight re-arrangement of other components (caps and reset pull-up).
- The board is fractionally longer, so that the RFM12B no longer sticks out. Most holes are slightly larger, making it easier to unsolder components, if you ever need to. The long sides of the board are now routed i.s.o. V-scored, i.e. smoother and more precise.

# Differences between JeeNode v3 and v4

The “JeeNode v4” board now has labels (silk-screens) on both sides. Other changes:

- **The PWR/I2C header has been moved** and two pins with RX and TX have been added.
- The voltage regulator and some passive components are in a slightly different location.
- Fixed the label so the that MCP1702 voltage regulator is now shown with the correct pinout.
- The v4 board is slightly narrower - 21.1 mm, the same as most JeePlugs.

# Differences between JeeNode v2 and v3

One clear change in the “JeeNode v3” board is that it’s now labeled (silk-screen). Other changes:

- **The Ports header pinouts have changed**, pins 4 and 5 have been swapped (AIO and +3V).
- **The ISP/SPI header pinout has changed**, pins 1..6 are now the ISP connector (3..8 in v2).
- **The PWR/I2C header pinout has changed**, PWR and GND have been swapped.
- Added 2 pads for connecting a battery / battery holder, with strain relief and +/- markings.
- Ports are now labeled Port1 .. Port4, with each pin labeled with its function.
- The v3 boards are blue with white markings (was green in v2).
- Identifying text on both sides of the board. Also a URL and copyright note.
- New copper trace routing using FreeRouter, for shorter traces and fewer vias.
- The v3 board was designed in collaboration with Paul Badger of Modern Device[6].

[6] http://www.moderndevice.com

# Differences between JeeNode v1 and v2

The "JeeNode v2" board has some changes, but is still mostly identical to the first prototype:

- Flipped the FTDI connector over, so an FTDI breakout board connects the "right way up".
- Exchanged outer pin 1 and 6 on all ports, to reduce potential damage on accidental shorts.
- Made changes to the TWI/Power connector pinout.
- Moved things around slightly, port pairs 1/2 and 3/4 are both 0.1" further apart.
- All connectors are now labeled with some text on the top copper layer.
- Added "JeeNode v2" label to the bottom copper layer, as well as a ground plane.
- The board was made slightly narrower, with excess borders trimmed off.
- Three mounting holes were dropped.

# On the web

Be sure to check out the Jee Labs daily weblog to find the latest information, libraries, sketches, example code, and to see a range of projects in which JeeNodes and JeePlugs are being used:

http://jeelabs.org/
http://cafe.jeelabs.net/

To see what's available as kit, pcb, and components, visit one of the following internet shops:

| | |
|---|---|
| http://.jeelabs.com/ | (Europe and other areas using the 868 MHz ISM band) |
| http://moderndevice.com/ | (for North America and other areas using 915 MHz) |

For questions and suggestions, you are welcome to participate in the discussion forums:

http://talk.jeelabs.net/

# Document revisions

12 Mar 2009 - First draft, incomplete.

14 Mar 2009 - Photo updated, added board version differences.

18 Mar 2009 - Added board layout diagram.

19 Mar 2009 - Added port pinout and pinout mapping table, fixed some typo's.

22 Jun 2009 - Document updated for the JeeNode v3.

26 Oct 2009 - Document updated for the JeeNode v4, added web links.

12 Jan 2010 - Fix pinout listing of FTDI connector (pins 1..6 reversed), DTR renamed to RTS.

25 Sep 2010 - Document updated for the JeeNode v5.